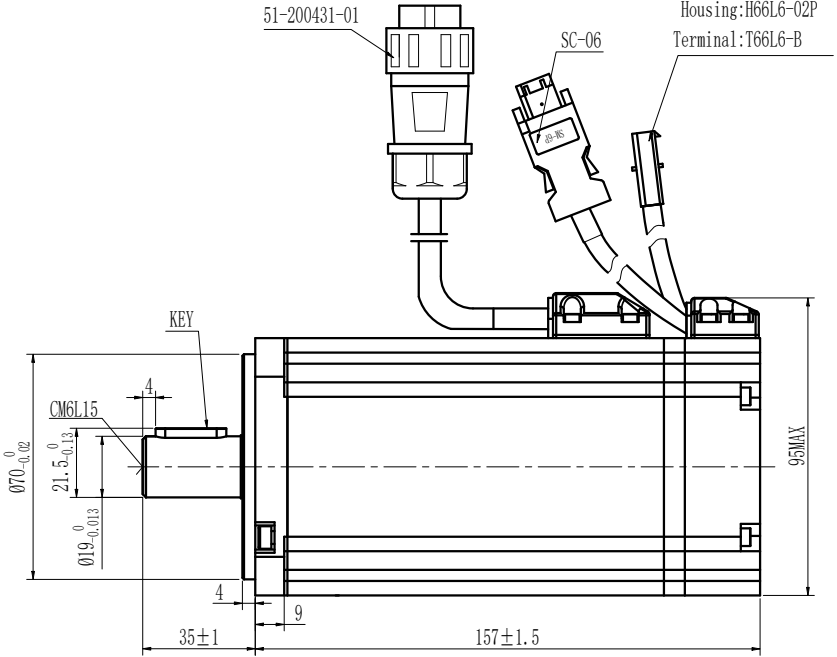
51-200431-01
SC-06
Housing:H66L6-02P
Terminal:T66L6-B
KEY
4
CM6L15
21.5 0 -0.13
Ø70 0 -0.02
Ø19 0 -0.013
95MAX
4
9
35±1
157±1.5

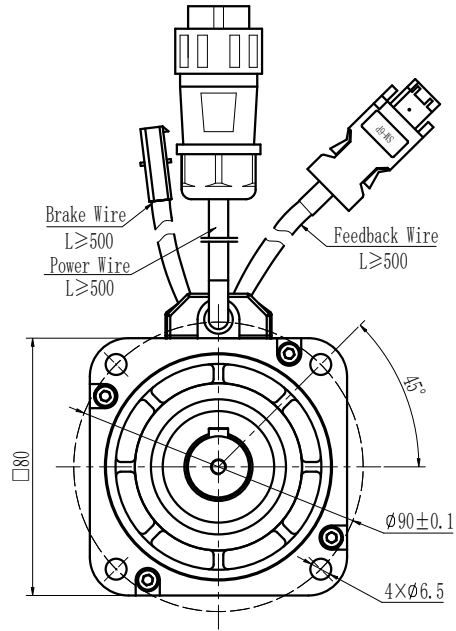
Brake Wire
L≥500
Power Wire
L≥500
Feedback Wire
L≥500
45°
□80
Ø90±0.1
4×Ø6.5